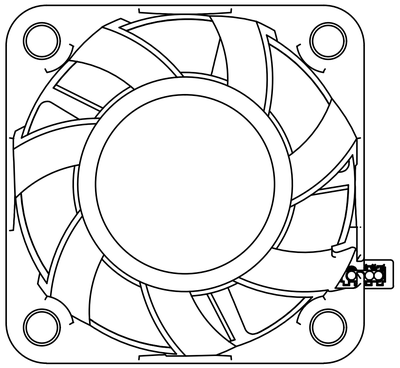

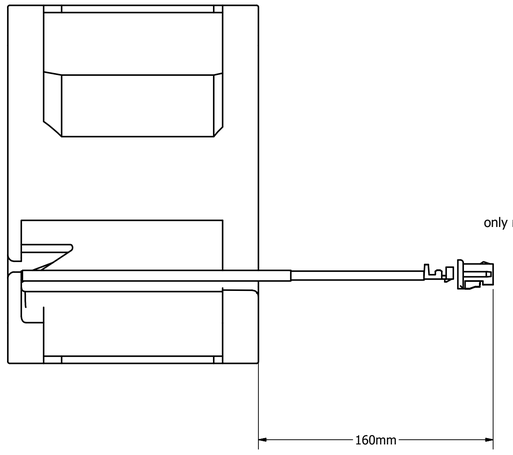

only red and black wire are needed (plus & minus)

TABLE			
Column 1	Column 2	Column 3	Column 4
ITEM	QTY	PART NUMBER	DESCRIPTION
1	1	TE Connectivity AMP Connectors 3-643814-2	
2	1	San Ace40 Fan 9GA0412P6G001	Fan
3	1	shrink tube 10mm diameter	shrink tube

DRAWN zechnerf	22.02.2019		
CHECKED		TITLE	
QA			
MFG			
APPROVED		SIZE D	DWG NO FA100002640 Fan modul 1 REV
		SCALE 3 : 1	SHEET 1 OF 1